Tim-02

Ceiling

TYPE:

PROJECT NAME:

Square ceiling lamp. Recessed and adjustable bulb. Structure available in the following colours: Code 02: black painted metal. Code 06: white painted metal.

SPECIFICATION SHEET

TYPE:

Ceiling

PROJECT NAME:

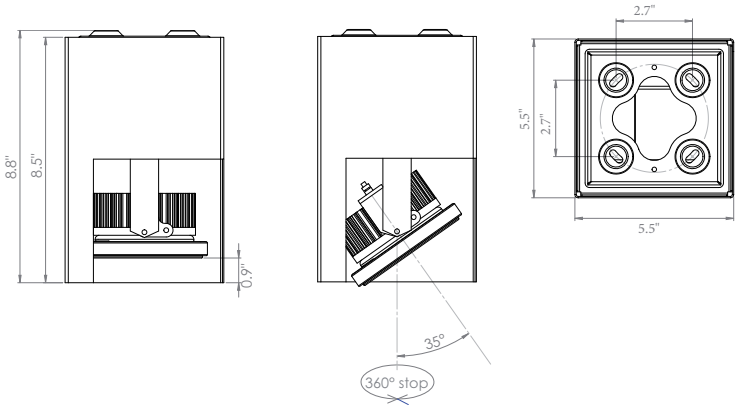

Code	©	K°	lm	Watt	lm/W	CRI	◢	IP
L17T02.62L.XX	700m/A led	2700	2683	26,9	100	85	60°	20
L17T02.63L.XX	700m/A led	3000	2842	26,9	106	85	60°	20
L17T02.64L.XX	700m/A led	4000	2969	26,9	110	85	60°	20
L17T02.62S.XX	700m/A led	2700	2683	26,9	100	85	24°	20
L17T02.63S.XX	700m/A led	3000	2842	26,9	106	85	24°	20
L17T02.64S.XX	700m/A led	4000	2969	26,9	110	85	24°	20
L17T02.62T.XX	700m/A led	2700	2683	26,9	100	85	12°	20
L17T02.63T.XX	700m/A led	3000	2842	26,9	106	85	12°	20
L17T02.64T.XX	700m/A led	4000	2969	26,9	110	85	12°	20

Code	Ⓣ	K°	lm	Watt	lm/W	CRI	◢	IP
L17T02.535.XX	G53	—	—	50	—	—	—	20

INPUT VOLTAGE 120V

Intertek

SPECIFICATION SHEET