LUX SHOWER™ 70

TYPE:

PROJECT NAME:

RECESSED

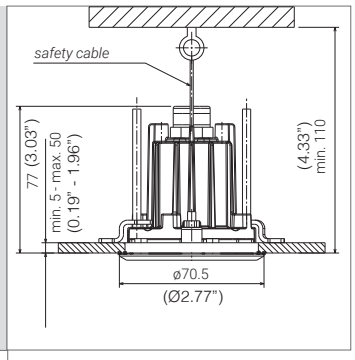

Ceiling hole
ø min. 65 mm - ø max. 66 mm
(min Ø2.55" - max Ø2.59")

COD.	LAMP	W	LM LED - REAL LM	
L981470	○ Led	3	240	130

Fixed optic.
IP 67 with flanges
CRI 80
24V DC

option — standard — option

add 18 to the code — *add 90 to the code*

SPECIFICATION SHEET

ORDERING INFO

Model (Order Code)	Finish	LED	Remote Driver Options
	○ Aluminum Grey	○ 3000K ○ 4000K	○ 120V Phase Dimming ○ 120V 0-10V Dimming ○ 277V 0-10V Dimming

Intertek