ROMEO™
SUSPENSION

TYPE:

PROJECT NAME:

Finish

Structure:

Nickel

Fabric options:

Cotton

Pleated

Pleated Ribbon

Wool

Fabric lampshade,
metal structure

IP20

DIM

* on demand
** cable on measure

Canopy detail

SPECIFICATION SHEET

ROMEO™
SUSPENSION

TYPE:

PROJECT NAME:

Diffuser finishes

Cotton

Cod. 300
Ivory

Cod. 301
White

Cod. 302
Sand

Cod. 303
Golden yellow

Cod. 315
Orange

Cod. 328
Gourd

Cod. 305
Lobate pink

Cod. 306
Red

Cod. 327
Lavender

Cod. 320
Mallow

Cod. 321
Periwinkle

Cod. 326
Navy blue

Cod. 319
Teal

Cod. 316
Green

Cod. 323
Sage

Cod. 318
Moss

Cod. 317
Dove colour

Cod. 324
Ecru

Cod. 314
Brown

Cod. 312
Grey

Cod. 310
Anthracite

Cod. 313
Black

Wool

Cod. 650
Sabbia / Sand

Cod. 651
Arancio / Orange

Cod. 652
Verde / Green

Cod. 653
Giallo senape /
Mustard yellow

Cod. 654
Viola / Purple

Cod. 655
Blu avio / Avio blue

Cod. 656
Grigio scuro / Dark grey

ROMEO™
SUSPENSION

TYPE:

PROJECT NAME:

Diffuser Finishes

Pleated

Cod. 500
White

Cod. 513
Ivory

Cod. 501
Beige

Cod. 511
Orange

Cod. 504
Flame red

Cod. 512
Dark red

Cod. 520
Electric blue

Cod. 515
Military

Cod. 514
Hazel

Cod. 505
Brown

Cod. 516
Dark brown

Cod. 517
Red brick

Cod. 509
Light grey

Cod. 519
Dark grey

Cod. 510
Anthracite

Cod. 502
Black

Pleated Ribbon

Cod. 700
Ivory

Cod. 704
Ecru

Cod. 701
Leather

Cod. 705
Yellow

Cod. 710
Terracotta

Cod. 711
Grey

Cod. 708
Cast Iron

SPECIFICATION SHEET

ROMEO™
SUSPENSION

TYPE:

PROJECT NAME:

Small suspension lamp - ø 25	ø 25 x 30 cm 1,3 kg	lamp type 1xE26 LED 15W	L82ROMESO025C01
Medium suspension lamp - ø 40	ø 40 x 45 cm 1,9 Kg	lamp type 1xE26 LED 15W	L82ROMESO040C01
Maxi suspension lamp - ø 70	ø 70 x 72 cm 5 Kg	lamp type 4xE26 LED 15W	L82ROMESP070C02

ORDERING INFO

Model (Order Code)	- Finish	- Voltage	- Dimming
		◯ 120V	◯ LTE (Leading/Trailing Edge Dim)

Intertek

Fixture comes with a 4” backplate that mounts to a standard junction box.

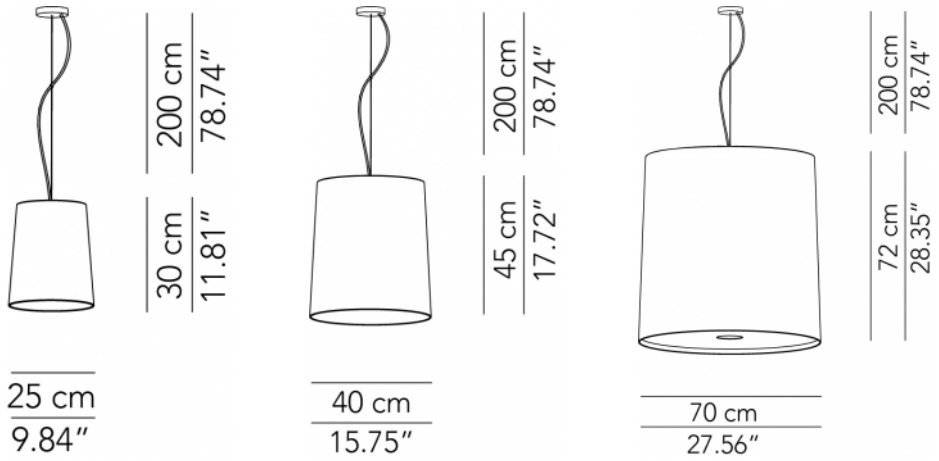

SPECIFICATION SHEET