STEP™

WALL UPLIGHT

TYPE:

PROJECT NAME:

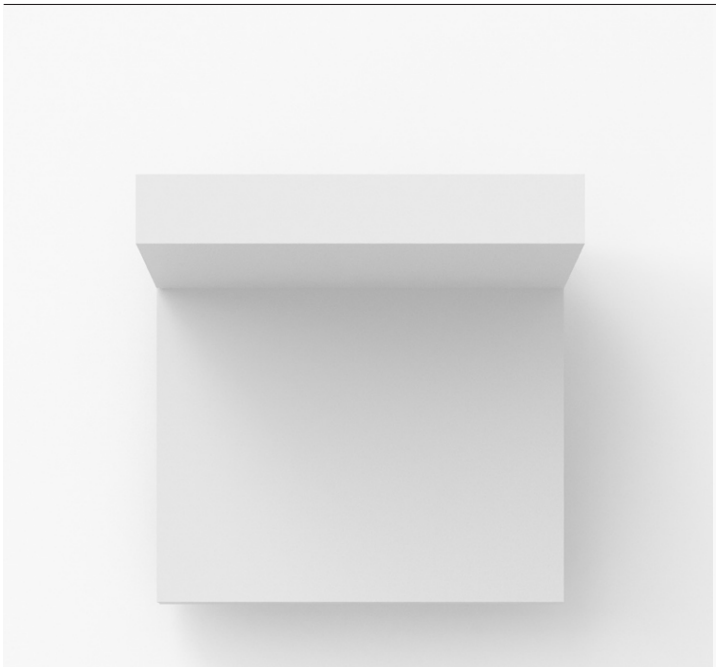

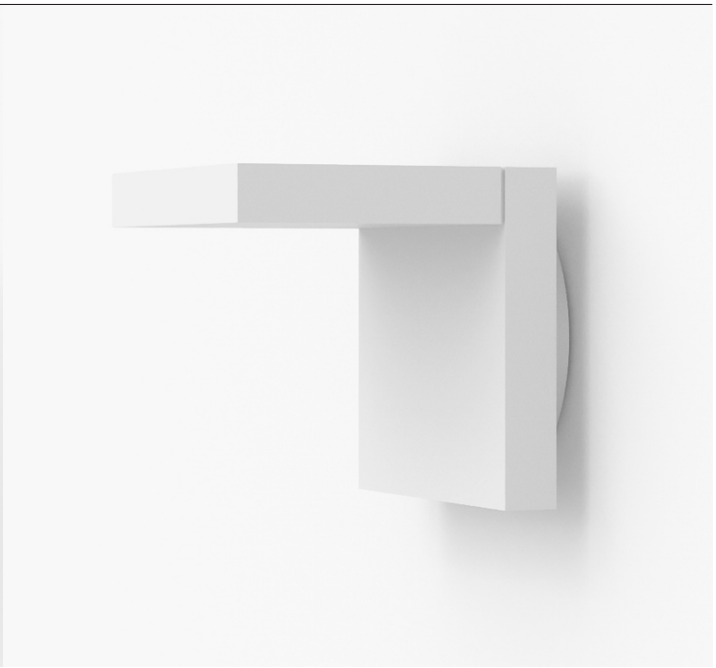

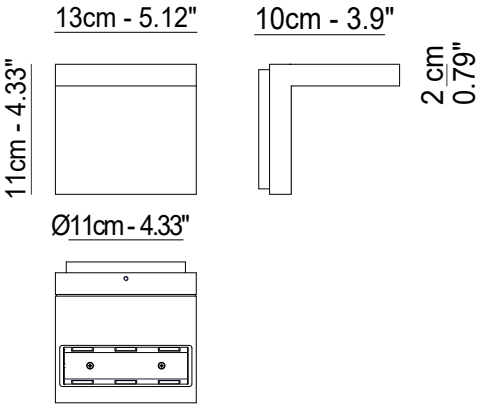

Step L16W0

Light Source	**LED**
Power	**16 Watt**
Kelvin	**2700, 3000, 3500**
Lumen	**1600**
CRI	**90**

Matte Finish

63 White

62 Matte black

SPECIFICATION SHEET

ORDERING INFO

L16W0	-	-	-
Model (Order Code)	Finish	LED	Driver Options
	◯ 62 Black ◯ 63 White	◯ 2700K ◯ 3000K ◯ 3500K	◯ 120V Phase Dimming ◯ 120V 0-10V Dimming ◯ 277V 0-10V Dimming

Intertek