STRING™ XL

FLOOR

TYPE:

PROJECT NAME:

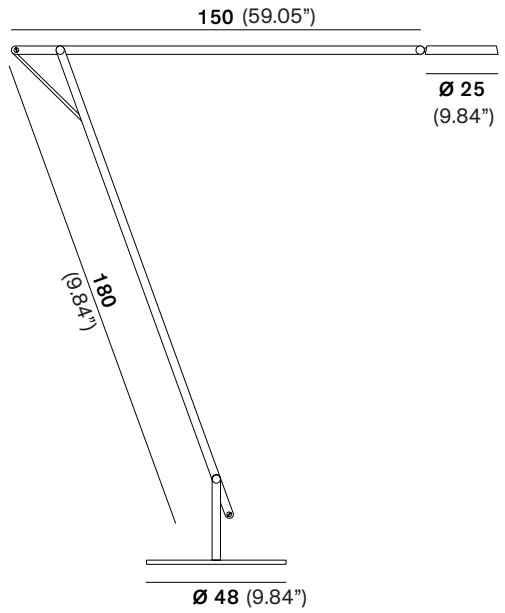

String L16XL

Matte Finish

62	63
Black	White

Cable Color

001	002	003
Orange	Black	Silver

Light Source	LED
Power	43 Watt
Kelvin	2700
Dimmer	touch
Lumen	3100
CRI	90
Voltage	120V

Intertek

Examples of configuration

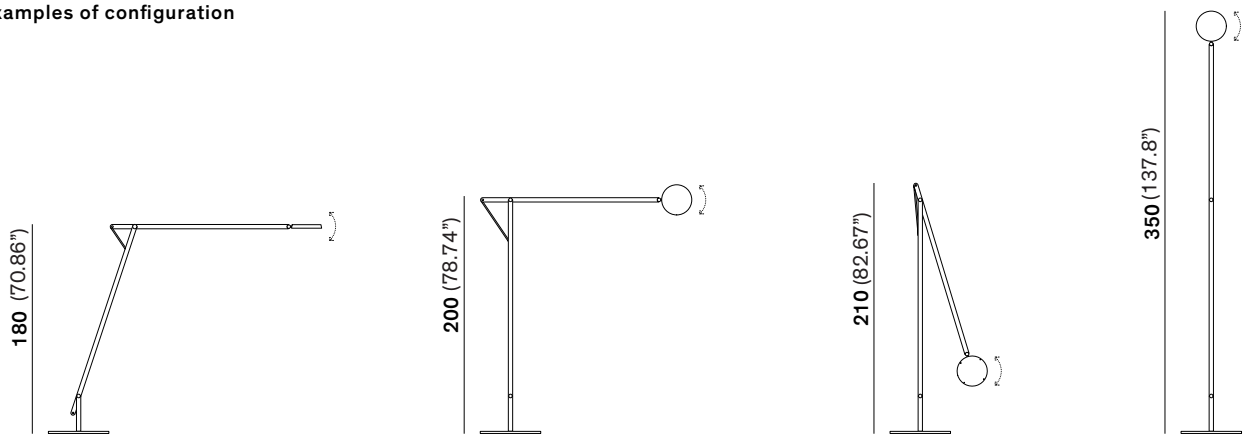

SPECIFICATION SHEET