SQUARE™
WALL

TYPE:

PROJECT NAME:

Square Recessed L902900R
Wall Recessed

IP 65 IK 07 TA 50°C RG0 Intertek

Square is a robust and durable product, designed to offer reliable and long-lasting lighting solutions in outdoor environments, with particular attention to residential areas characterized by gardens, alleys and green areas. Mechanically designed to ensure precise and directed light scattering. Available with square or rectangular window, and in the bollard version.

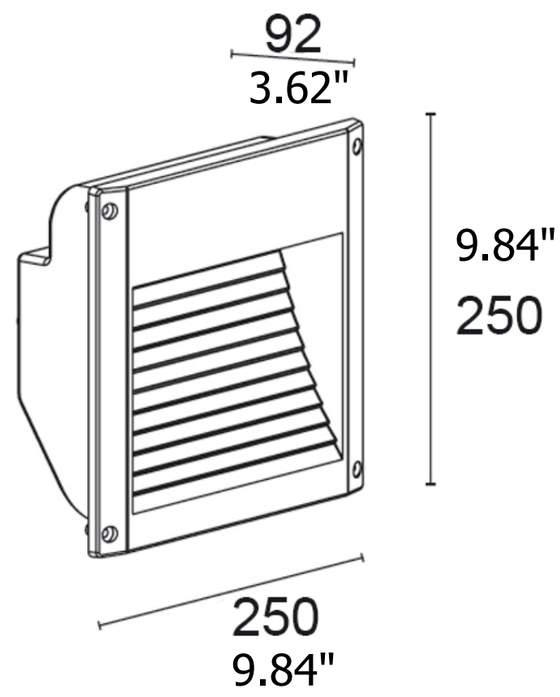

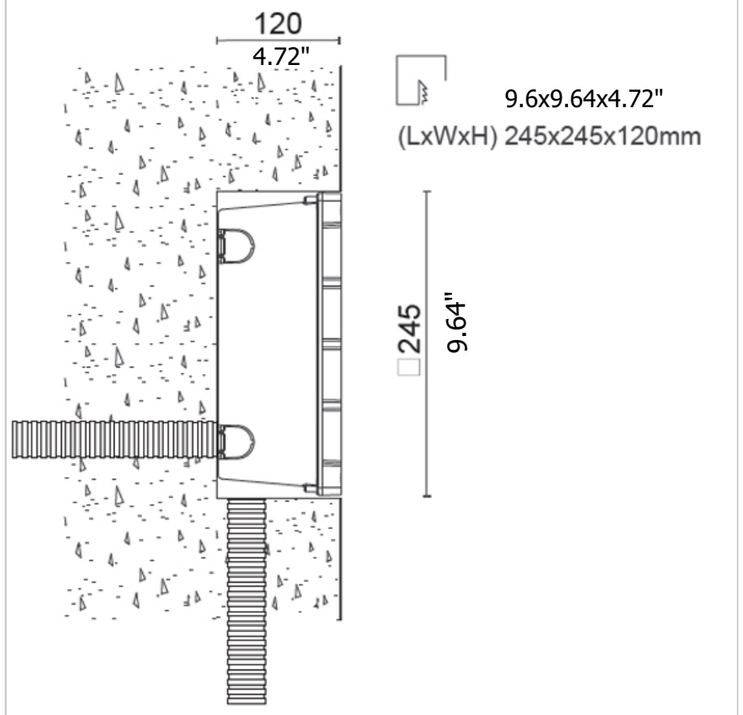

FIXTURE SPECIFICATIONS

ASSEMBLY / USAGE
Wall recessed

PROTECTION
IP 65 - IK 07

BODY
Die-cast aluminium

BOX
Polypropylene (PP) 30% UV stabilized fiber GWT750

SCREEN
Transparent polycarbonate

SEALS
EPDM

SCREWS
Stainless steel A2

PAINT / FINISHING
Anti-corrosive UV stabilized polyester powder

SIZES
H 250 (9.84") x L 250 (9.84") x W 92 (3.62)

NET WEIGHT
1,85 Kg

POWER SPECIFICATIONS

POWER SUPPLY
120-277Vac 50/60Hz
180-280Vdc

DRIVER
Built-in

DRIVER CURRENT
500mA

CONTROL
LTE-0-10V

POWER MODULE LED
13W

ABSORBED POWER
15W

INSULATION CLASS
I

INRUSH CURRENT
20A 29µs

N° MAX FIXTURES CONNECTABLE TO SWITCHES

B 16A 25
C 16A 40

TECHNICAL SPECIFICATIONS

CCT LED
3000K or 4000K

CRI
>80

SOURCE FLUX
1920 lm (3000K)

2020 lm (4000K)

FIXTURE SOURCE
510 lm (3000K)

535 lm (4000K)

APPARENT EFFICIENCY
27 %

OPERATING TA
50 °

LIFE TIME TM-21 L80B10
80000h Ta 25°C

PHOTOBIOLOGICAL RISK
RG0

BEAM OPENING
Asymmetric >100°

SPECIFICATION SHEET

SQUARE™
WALL

TYPE:

PROJECT NAME:

PHOTOMETRICAL DATA

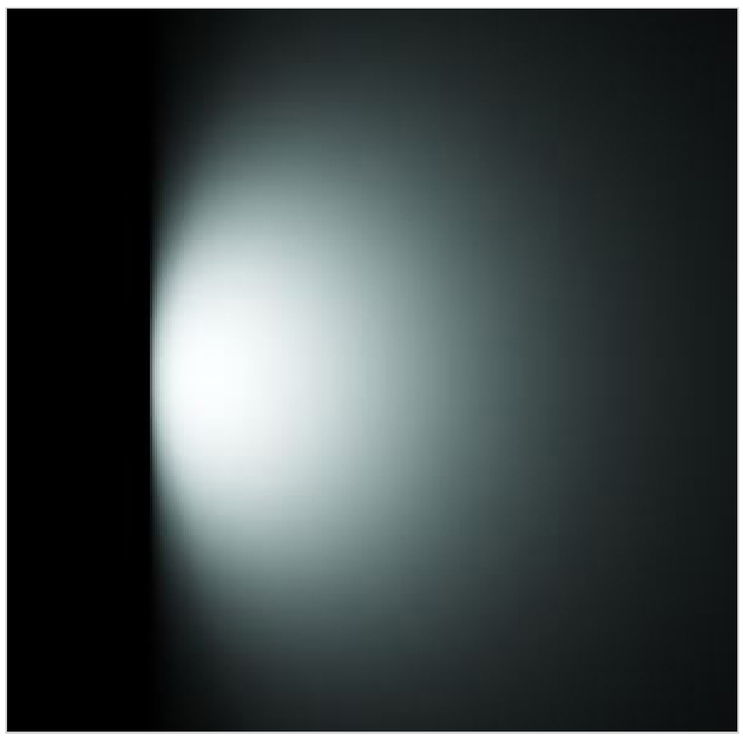

COLORS

00	01	10	24	25	30	35	40
WHITE RAL 9016	BLACK RAL 9005	WHITE RAL 9010	BRONZE	RUST	ANTHRACITE	SLATE GREY	GREY RAL 9006

ACCESSORIES

MOR683P/2V0 Connector IP68 3Poles/2Ways

L 95 (3.74") x Ø 31 (1.22")

E.TRA.580 Ultra compact type 2+3 hard wired surge protector

L 37 (1.45") x W 30 (1.18") x H 30 (1.18")

SPECIFICATION SHEET