INVISIBLE V2™

CEILING / RECESSED

TYPE:

PROJECT NAME:



IP20

650°

LIGHTING DATA

DIM

PATENT PENDING

Invisibile V2 is a semi-recessed spotlight with pull-out cylinder to direct the light. Available with black and white trims.

Developed to achieve the maximum glare control.

TIR optical design (total internal reflection), that making this product champion of efficiency and visual comfort.



SPECIFICATION SHEET

INVISIBLE V2™

CEILING / RECESSED

TYPE:

PROJECT NAME:

IP40 | MC-E=3

250m/A | LED 9W | CRI>90

4V2A.3 ■◭.□

with honeycomb

■ Led color	Nominal lm	◭ Beam spread
2 = 2700K	1280	M = 36°
3 = 3000K	1318	S = 24°
		T = 15°

IP40 | MC-E=3

350m/A | LED 15W | CRI>90

4V2A.3 ■◭.□

with honeycomb

■ Led color	Nominal lm	◭ Beam spread
2 = 2700K	2400	M = 36°
3 = 3000K	2472	S = 24°
		T = 15°

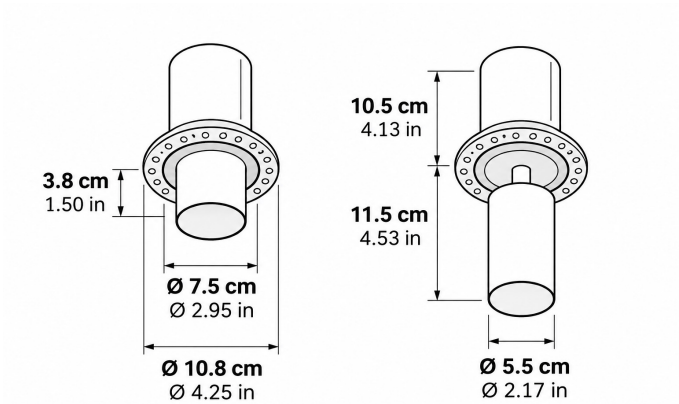



355° rotation and 90° incline.



Recessed option.

Color options

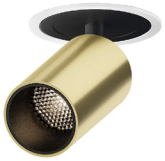

1W-Brushed Brass



2W-Brushed Rose Bronze



3W-Glossy Black Titanium



4W-Brushed Nickel



5W-Black



6W-White



1B-Brushed Brass



2B-Brushed Rose Bronze



3B-Glossy Black Titanium



4B-Brushed Nickel



5B-Black



6B-White

SPECIFICATION SHEET

ORDERING INFO

Model (Order Code)	Trim Finish	Structure Finish	Beam Spread	LED	Driver Options
○ Invisible V2 - 9W	○ White Trim	○ 1 - Brushed Brass	○ 36° Optics	○ 2700K	○ 120V LTE
○ Invisible V2 - 15W	○ Black Trim	○ 2 - Brushed Rose Bronze	○ 24° Optics	○ 3000K	○ 120-277V 0-10V
		○ 3 - Glossy Black Titanium	○ 15° Optics		
		○ 4 - Brushed Nickel			
		○ 5 - Black			
		○ 6 - White			

Intertek